Corrected to October 1962

Parts List No. 5546

KODAK RETINETTE 1A CAMERA
and
FIELD CASE

ORDER PARTS FROM APPARATUS PARTS SERVICE
EASTMAN KODAK COMPANY, ROCHESTER 4, N.Y.

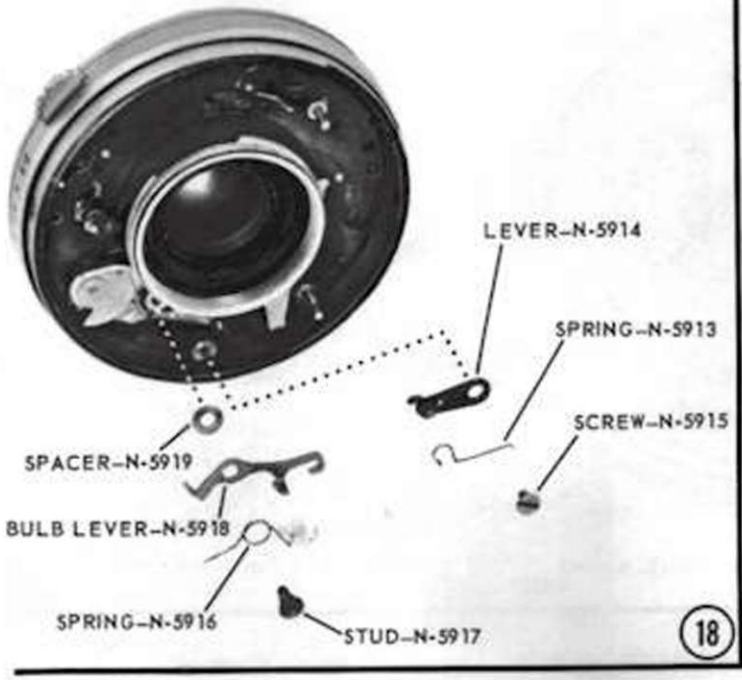
LEVER–N-5914
SPRING–N-5913
SCREW–N-5915
SPACER–N-5919
BULB LEVER–N-5918
SPRING–N-5916
STUD–N-5917

18

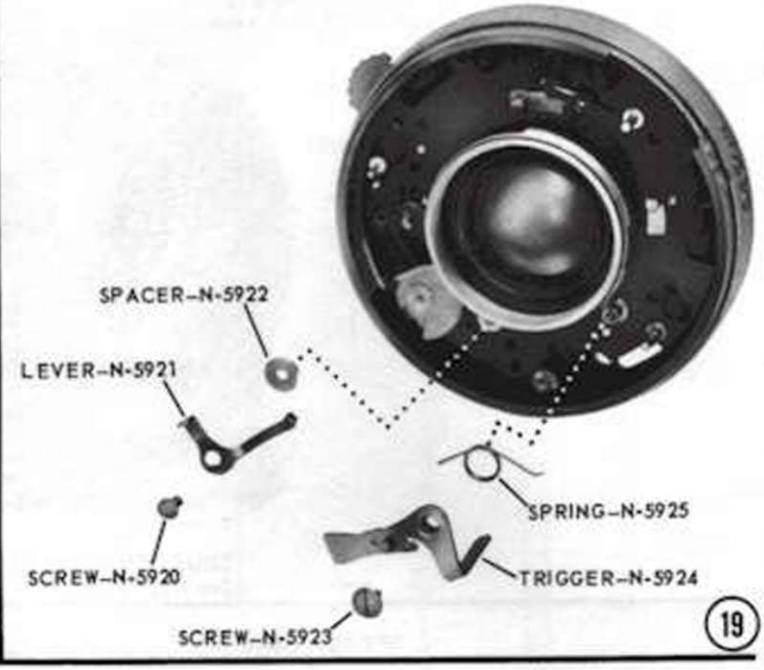
SPACER–N-5922
LEVER–N-5921
SPRING–N-5925
SCREW–N-5920
TRIGGER–N-5924
SCREW–N-5923

19

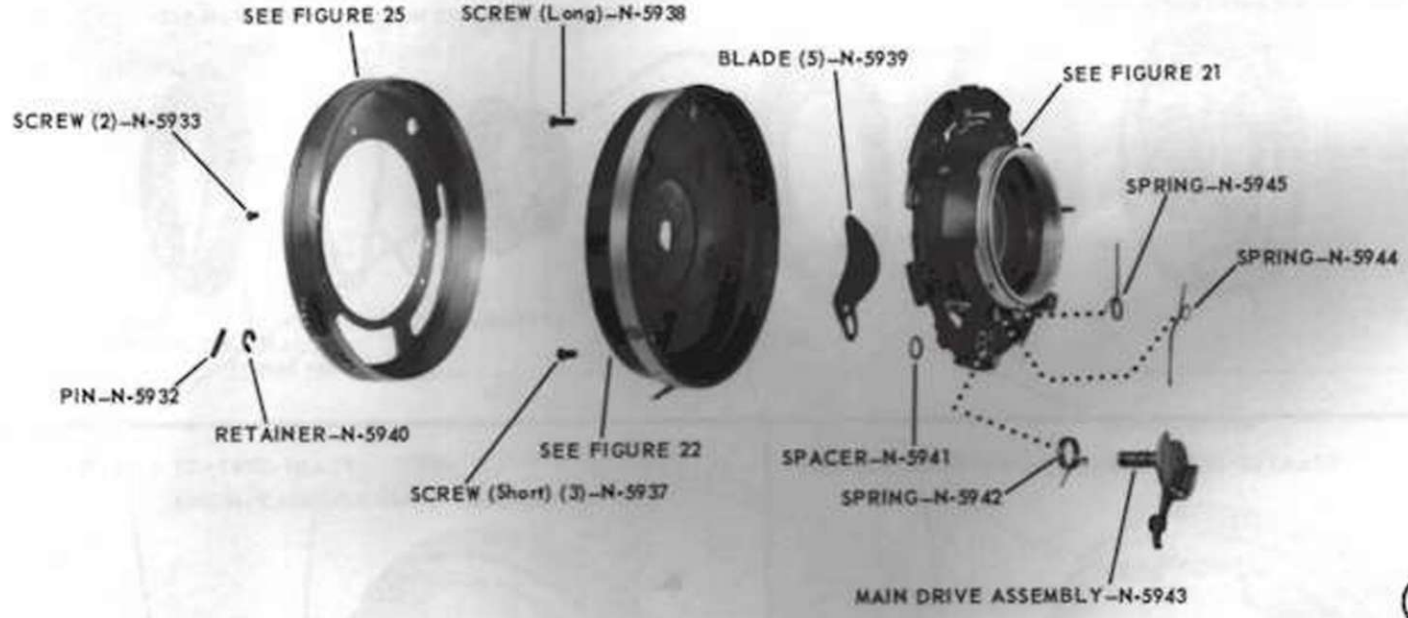
SEE FIGURE 25
SCREW (Long)–N-5938
BLADE (5)–N-5939
SEE FIGURE 21
SCREW (2)–N-5933
SPRING–N-5945
SPRING–N-5944
PIN–N-5932
RETAINER–N-5940
SEE FIGURE 22
SPACER–N-5941
SCREW (Short) (3)–N-5937
SPRING–N-5942
MAIN DRIVE ASSEMBLY–N-5943

20

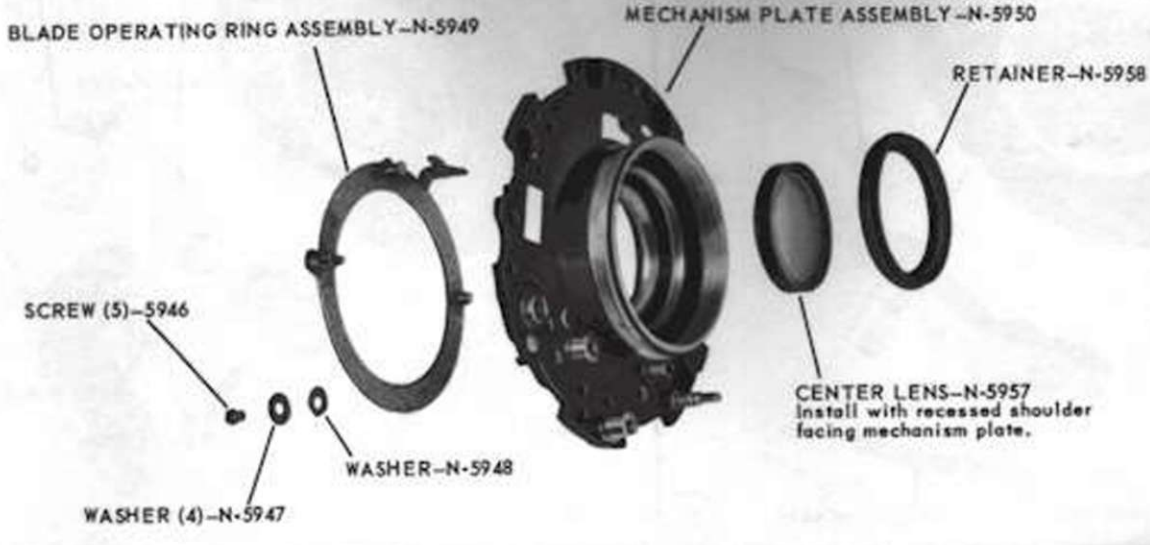
BLADE OPERATING RING ASSEMBLY–N-5949
MECHANISM PLATE ASSEMBLY–N-5950
RETAINER–N-5958
SCREW (5)–5946
CENTER LENS–N-5957
Install with recessed shoulder facing mechanism plate.
WASHER–N-5948
WASHER (4)–N-5947

21

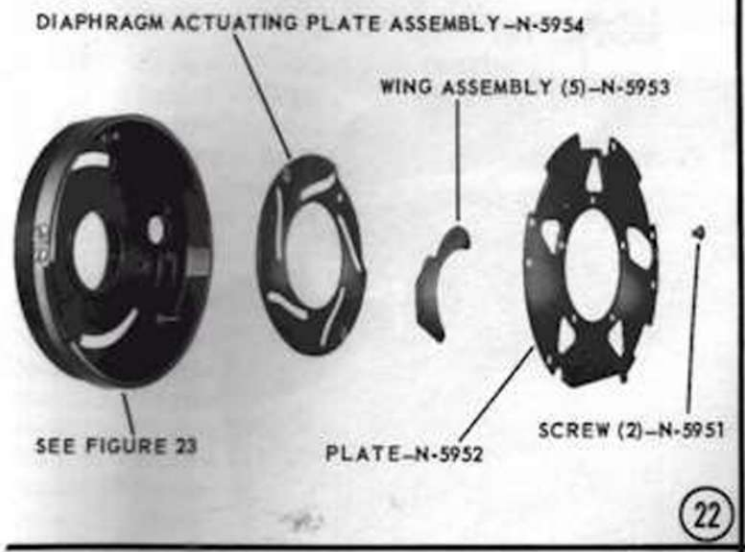

22

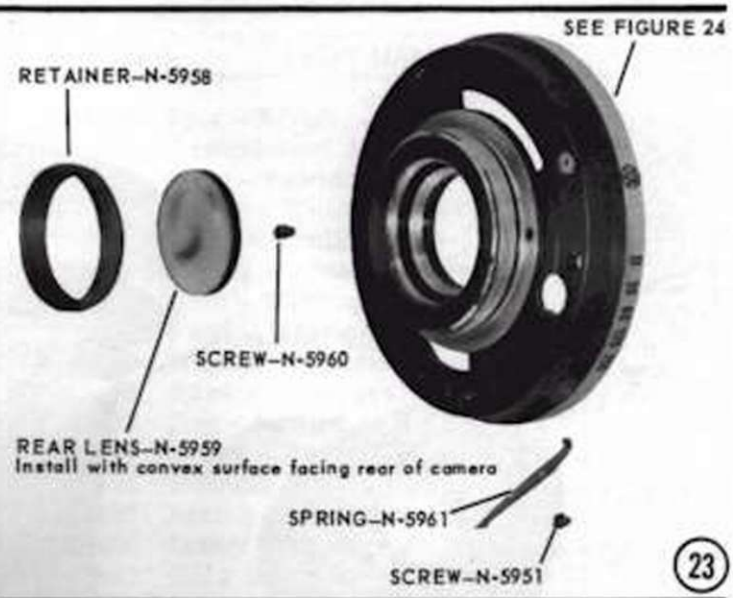

23

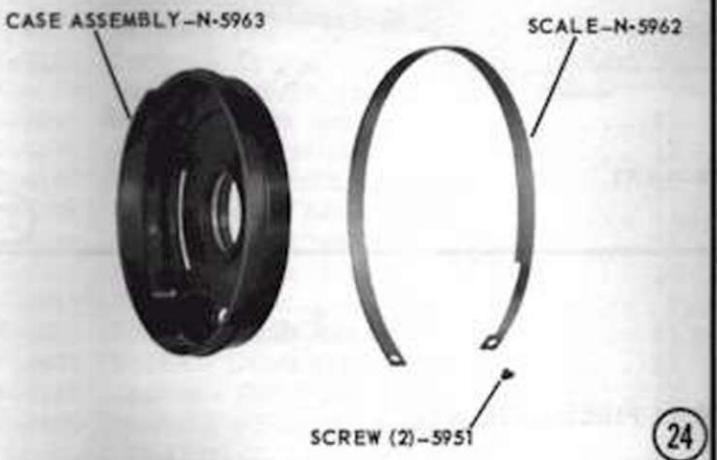

24

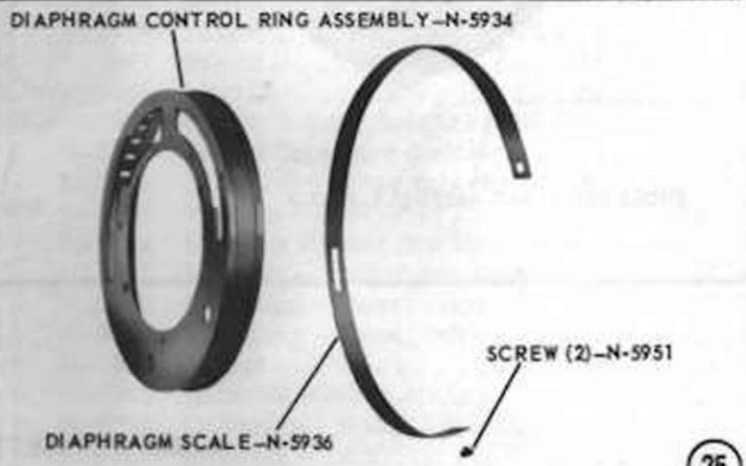

25

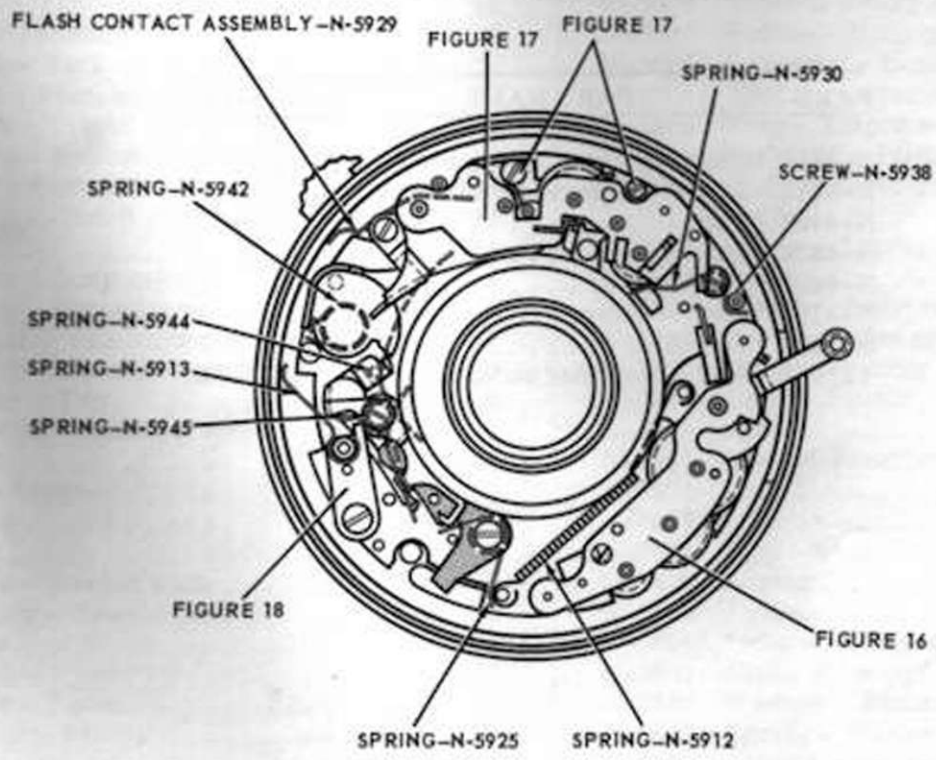

This illustration shows springs and related parts in set position.

26

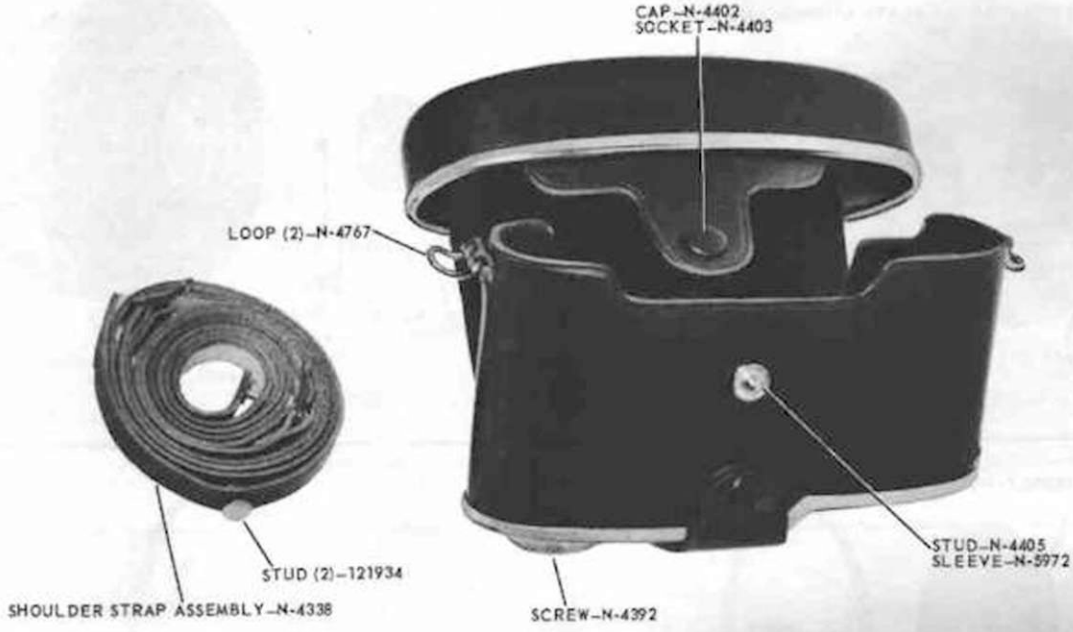

27

KODAK RETINETTE 1A FIELD CASE

PART NO.	PART NAME	FIG.
N-4338	Shoulder Strap Assembly	27
N-4392	Screw - Camera retaining	27
N-4402	Cap	27
N-4403	Socket	27
N-4405	Stud	27
N-4767	Loop - Strap	27
N-5972	Sleeve	27
121934	Stud - Shoulder strap	27

PART NO.	PART NAME	FIG.
N-2222	Screw - Rewind post bearing	8
N-2423	Screw - Clip	2
N-2483	Screw	3
N-2617	Spring - Rewind release dog	9
N-2618	Film Tension Pad Assembly	7
N-2675	Washer - Rewind release button	9
N-2677	Screw	5
N-2699	Screw - Back latch plate	12
N-2717	Spring - Film tension pad	7
N-2722	Rivet	7
N-2724	Washer - Film indicator	1
N-4025	Screw - Wind release adjusting	11
N-4026	Spring - Wind release	11
N-4051	Screw	1
N-4052	Screw	1
N-4092	Bushing - Body release	2
N-4099	Screw	8
N-4140	Screw - Sprocket shaft	11
N-4182	Screw - Tripod socket	9
N-4183	Socket - Tripod	9
N-4184	Bearing - Film cassette	9
N-4194	Spring - Back latch button	12
N-4195	Plate - Back latch	12
N-4197	Stud - Back latch guide	12
N-4208	Wind Release Assembly	11
N-4211	Spring - Wind release	11
N-4212	Screw - Winding shaft	10
N-4219	Button - Rewind release	9
N-4220	Sprocket Shaft Assembly	11
N-4222	Screw - Drive gear pawl	11
N-4225	Spacer - Drive gear pawl	11
N-4230	Bushing - Take-up spool (Old Style N-4231)	11
N-4231	Spool - Take-up (Old Style)	11
N-4236	Hinge Assembly	7
N-4238	Catch - Back	7
N-4239	Rivet - Film tension pad spring	7
N-4321	Screw - Tripod socket ring	9
N-4325	Spring - Rewind release button	9
N-4354	Gear - Clutch	11
N-4355	Spring - Clutch pressure	11
N-4356	Clutch	11
N-4423	Button - Body release	1
N-4436	Spring - Exposure counter	2
N-4437	Washer - Exposure counter dial	2
N-4441	Screw - Exposure counter	2
N-4486	Frame - Top	8
N-4530	Covering - Winding lever	9
N-4545	Rivet	7
N-4547	Pin - Hinge	7
N-4580	Spring	8
N-4613	Plate	7
N-4743	Screw - Rewind knob	1
N-4792	Bearing - Rewind post	8
N-4887	Screw	11
N-4921	Roller - Film	7
N-4977	Screw - Front	12
N-4994	Mirror - Finder	4
N-5016	Clip	2
N-5188	Rewind Knob Assembly	1
N-5250	Indicator - Film	1
N-5329	Spot - Kodak	5
N-5410	Rewind Post Assembly	8
N-5411	Ring - Rewind post	8
N-5417	Screw - Winding lever	9
N-5418	Gear - Winding shaft	10
N-5419	Spring - Tension lever	10
N-5420	Cam - Winding shaft	10
N-5421	Pawl - Winding shaft	10
N-5422	Washer - Winding shaft	10
N-5432	Pawl - Drive gear	11
N-5433	Dog - Rewind release	9
N-5434	Screw - Rewind release dog	9
N-5436	Bushing and Gear Assembly	11
N-5437	Spring - Drive gear pawl	11
N-5439	Screw - Winding shaft	11
N-5443	Back Latch Assembly	12
N-5533	Strip	7
N-5538	Screw	12
N-5547	Screw	3
N-5550	Mirror	4
N-5579	Spring - Body release push rod	1
N-5581	Dial - Exposure counter	2
N-5582	Disk - Exposure counter index	2
N-5583	Window - Finder	3
N-5584	Mount - Finder eye lens	4
N-5585	Window - Finder eye lens	4
N-5588	Covering - Case, right	6
N-5589	Covering - Case, left	6
N-5590	Frame	5
N-5593	Back Assembly	6
N-5598	Covering - Back	7
N-5601	Bracket - Left	8
N-5602	Bracket - Right	8
N-5604	Tension Lever Assembly	10
N-5605	Frame - Bottom	9
N-5606	Covering - Bottom	9
N-5607	Winding Lever Assembly	9
N-5608	Ring - Tripod socket	9
N-5611	Sprocket - Film	11
N-5614	Body Release Push Rod Assembly	1
N-5615	Spring	3
N-5622	Screw - Latch	13
N-5623	Latch	13
N-5625	Rivet - Body release arm	13
N-5848	Spool - Take-up (New Style)	11
N-5872	Finder Housing Assembly	1
N-5873	Lens - Finder	3
N-5874	Spring	3
N-5875	Plate - Reinforcement	3
N-5876	Lens	4
N-5877	Clip	4
N-5878	Clip - Mirror	4
N-5879	Spring	4
N-5880	Frame	4
N-5881	Lens - Finder eye	4
N-5882	Glass - Ground	4
N-5883	Washer - Finder eye lens	4
N-5884	Spring - Finder eye lens	4
N-5885	Finder Body Assembly	4
N-5886	Collar - Shutter retaining	5
N-5887	Front Cap Assembly	5

PART NO.	PART NAME	FIG.
N-5888	Washer - Lens compensating .002	5
N-5889	Washer - Lens compensating .0025	5
N-5890	Washer - Lens compensating .004	5
N-5891	Washer - Lens compensating .013	5
N-5892	Washer - Lens compensating .021	5
N-5893	Ring	5
N-5894	Shutter and Lens Assembly (Feet)	5
N-5895	Case Assembly (Includes Studs — N-4197)	12
N-5896	Tunnel - Light	12
N-5897	Front Assembly	12
N-5898	Arm - Body release	13
N-5899	Sleeve	13
N-5900	Front	13
N-5973	Winding Shaft Assembly (For old style Spool - N-4231)	11
N-5980	Winding Shaft Assembly (For new style Spool - N-5848)	11

PRONTO SHUTTER

N-5894	Pronto Shutter Assembly (Feet)	14
N-5902	Screw - Focus mount	15
N-5903	Mount - Focus	15
N-5904	Spring - Focus mount detent	15
N-5905	Retainer - Cover plate	15
N-5906	Cover Plate Assembly	15
N-5907	Ring - Speed	15
N-5908	Retard Gear Train Assembly	17
N-5909	Screw - Gear train, long	17
N-5910	Screw - Gear train, short	17
N-5911	Delayed Action Gear Train Assembly	16
N-5912	Spring - Delayed-action gear train	16
N-5913	Spring - Speed ring detent lever	18
N-5914	Lever - Speed ring detent	18
N-5915	Screw - Speed ring detent lever	18
N-5916	Spring - Bulb lever	18
N-5917	Stud - Bulb lever	18
N-5918	Lever - Bulb	18
N-5919	Spacer - Bulb lever	18
N-5920	Screw - Latch lever	19
N-5921	Lever - Latch	19
N-5922	Spacer - Latch lever	19
N-5923	Screw - Trigger	19
N-5924	Trigger	19
N-5925	Spring - Trigger	19
N-5926	Stud - Flash contact lever	17
N-5927	Lever - Flash contact	17
N-5928	Spacer - Flash contact lever	17
N-5929	Flash Contact Assembly	17
N-5930	Spring - Blade operating ring	17
N-5931	Screw - Blade operating ring spring	17
N-5932	Pin - Main drive	20
N-5933	Screw - Diaphragm control ring	20
N-5934	Diaphragm Control Ring Assembly	25
N-5936	Scale - Diaphragm	25
N-5937	Screw - Case to mechanism plate, short	20
N-5938	Screw - Case to mechanism plate, long	20
N-5939	Blade	20
N-5940	Retainer - Main drive	20
N-5941	Spacer - Main drive	20
N-5942	Spring - Main drive	20
N-5943	Main Drive Assembly	20
N-5944	Spring - Blade actuating arm	20
N-5945	Spring - Latch lever	20
N-5946	Screw - Blade operating ring	21
N-5947	Washer - Blade operating ring	21
N-5948	Washer - Blade operating ring (flat one side)	21
N-5949	Blade Operating Ring Assembly	21
N-5950	Mechanism Plate Assembly	21
N-5951	Screw	22
N-5952	Plate - Diaphragm retainer	22
N-5953	Diaphragm Wing Assembly	22
N-5954	Diaphragm Actuating Plate Assembly	22
N-5955	Front Lens and Mount Assembly	15
N-5957	Lens - Center	21
N-5958	Retainer - Center lens	21
N-5959	Lens - Rear	23
N-5960	Screw - Shutter locating	23
N-5961	Spring - Diaphragm scale detent	23
N-5962	Scale - Speed index	24
N-5963	Case Assembly	24

EASTMAN KODAK COMPANY • ROCHESTER 4, NEW YORK

376-10-62-SH-B

Printed in the United States of America

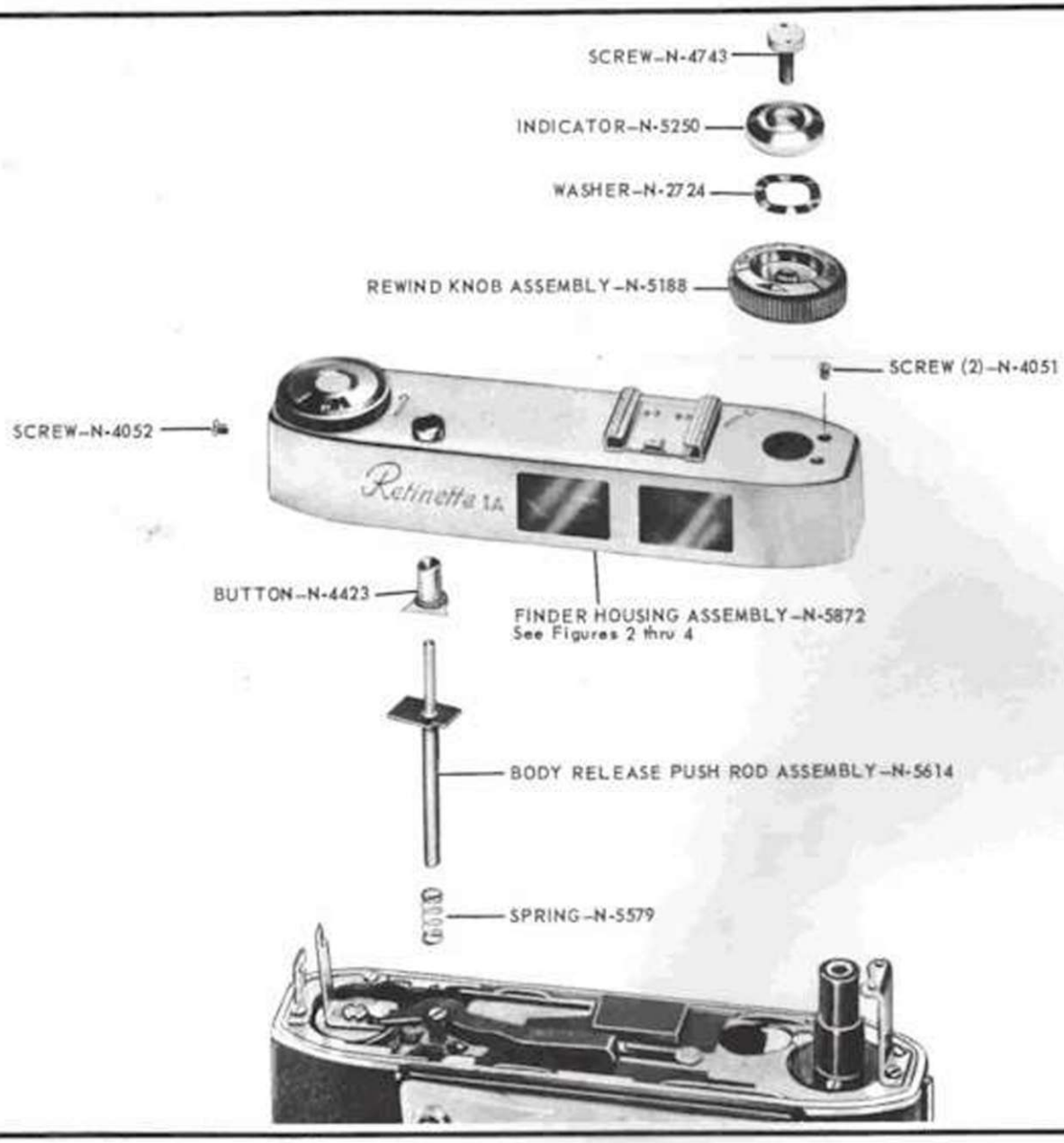
SCREW–N-4743
INDICATOR–N-5250
WASHER–N-2724
REWIND KNOB ASSEMBLY–N-5188
SCREW (2)–N-4051
SCREW–N-4052
Retinette 1A
BUTTON–N-4423
FINDER HOUSING ASSEMBLY–N-5872
See Figures 2 thru 4
BODY RELEASE PUSH ROD ASSEMBLY–N-5614
SPRING–N-5579

1

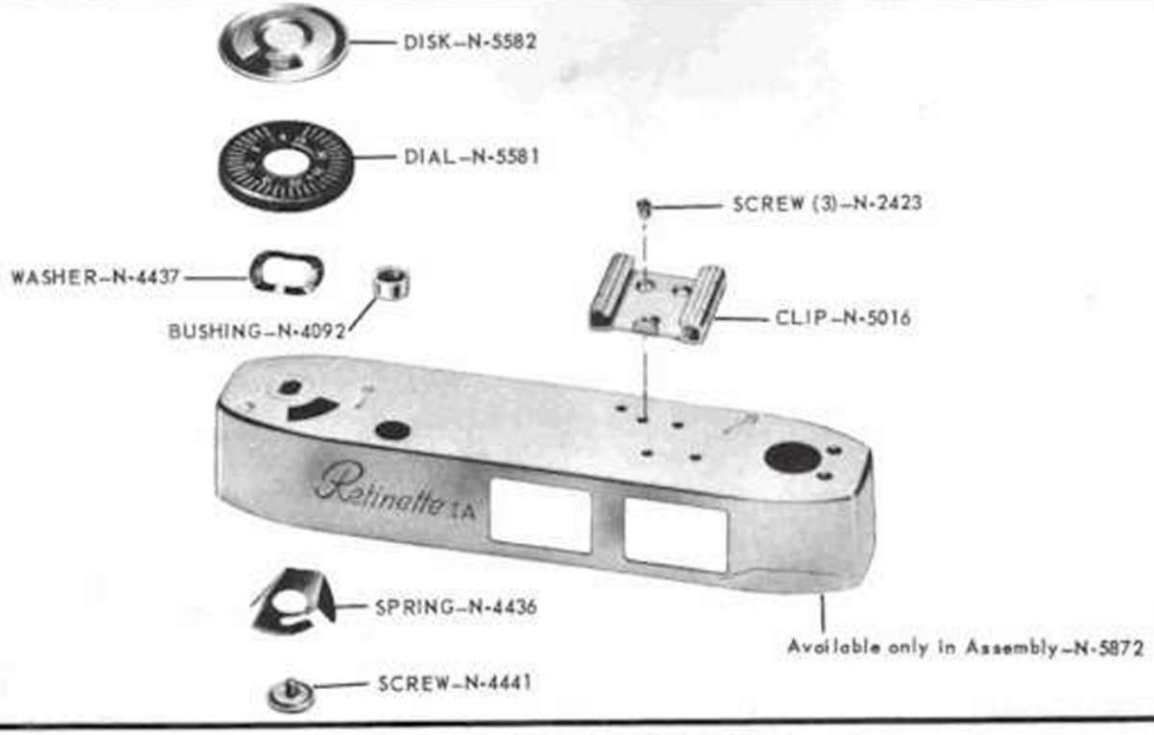
DISK–N-5582
DIAL–N-5581
SCREW (3)–N-2423
WASHER–N-4437
BUSHING–N-4092
CLIP–N-5016
Retinette 1A
SPRING–N-4436
Available only in Assembly–N-5872
SCREW–N-4441

2

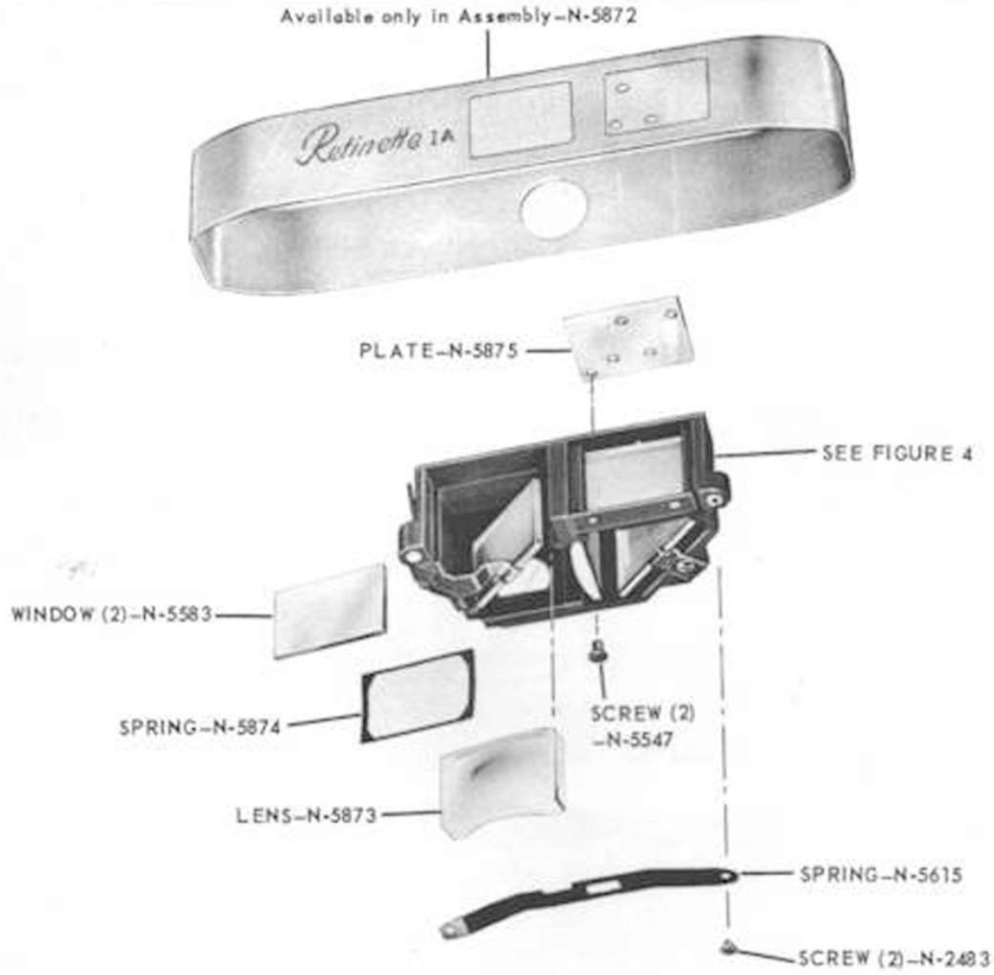
Available only in Assembly–N-5872
Retinette 1A
PLATE–N-5875
SEE FIGURE 4
WINDOW (2)–N-5583
SPRING–N-5874
SCREW (2) –N-5547
LENS–N-5873
SPRING–N-5615
SCREW (2)–N-2483

3

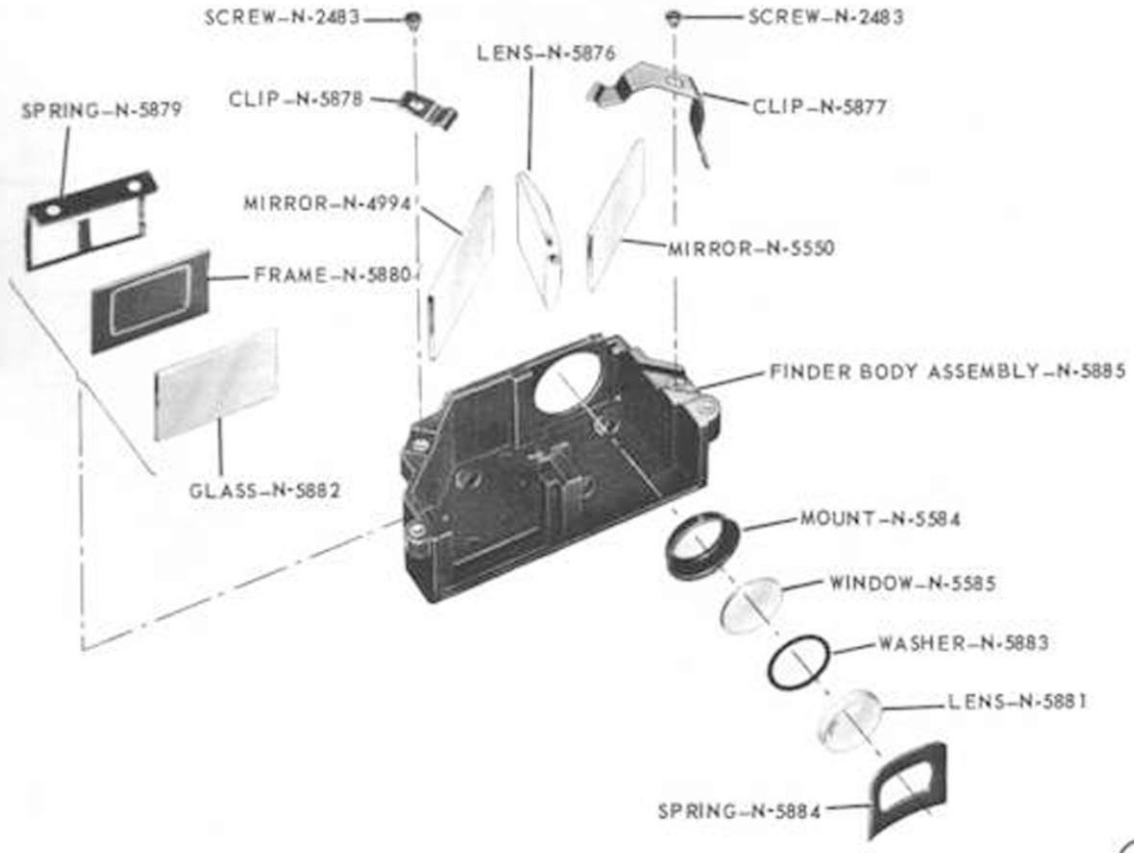
SCREW–N-2483
SCREW–N-2483
LENS–N-5876
SPRING–N-5879
CLIP–N-5878
CLIP–N-5877
MIRROR–N-4994
MIRROR–N-5550
FRAME–N-5880
FINDER BODY ASSEMBLY–N-5885
GLASS–N-5882
MOUNT–N-5584
WINDOW–N-5585
WASHER–N-5883
LENS–N-5881
SPRING–N-5884

4

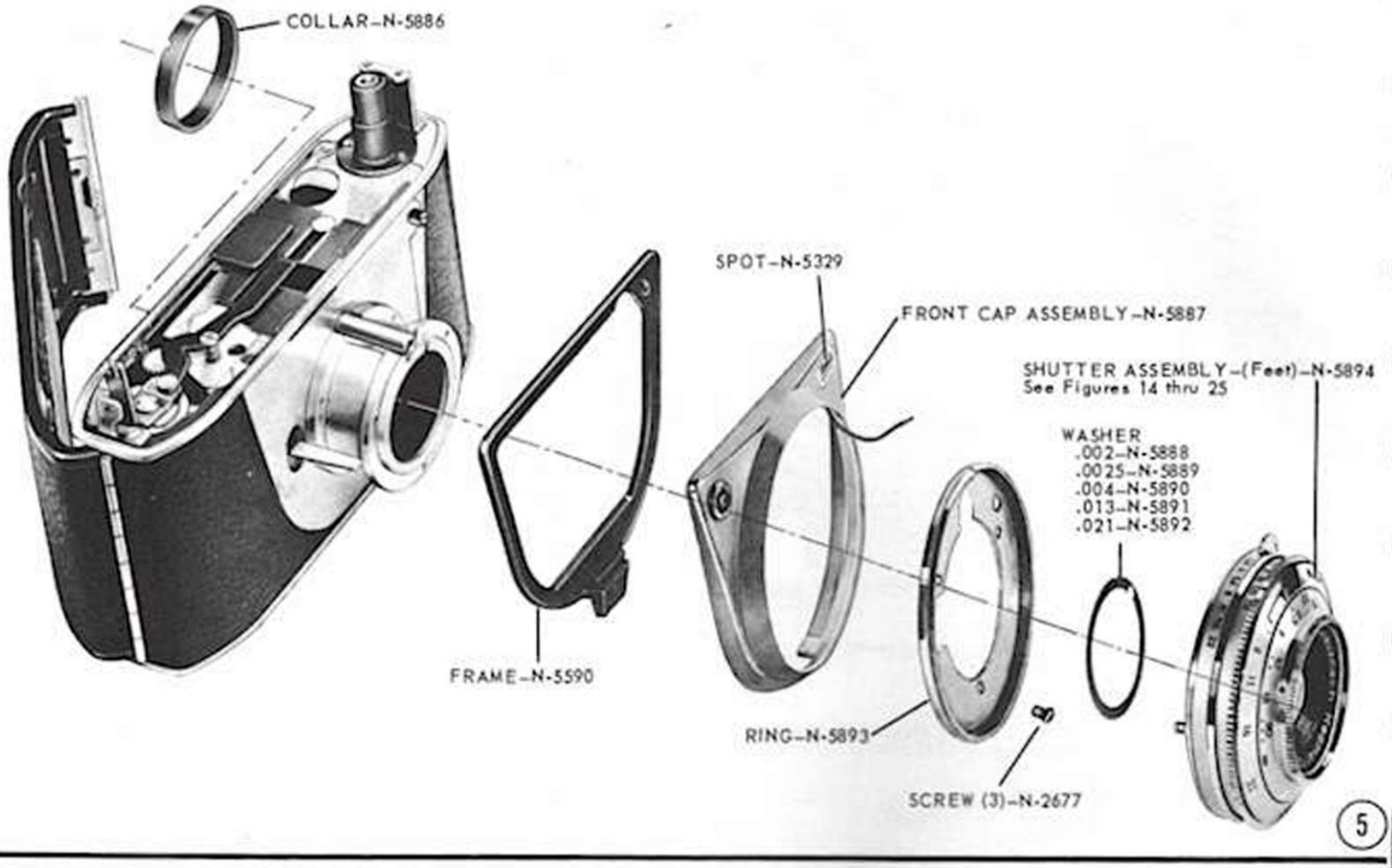
COLLAR–N-5886
SPOT–N-5329
FRONT CAP ASSEMBLY–N-5887
SHUTTER ASSEMBLY–(Feet)–N-5894
See Figures 14 thru 25
WASHER
.002–N-5888
.0025–N-5889
.004–N-5890
.013–N-5891
.021–N-5892
FRAME–N-5590
RING–N-5893
SCREW (3)–N-2677

5

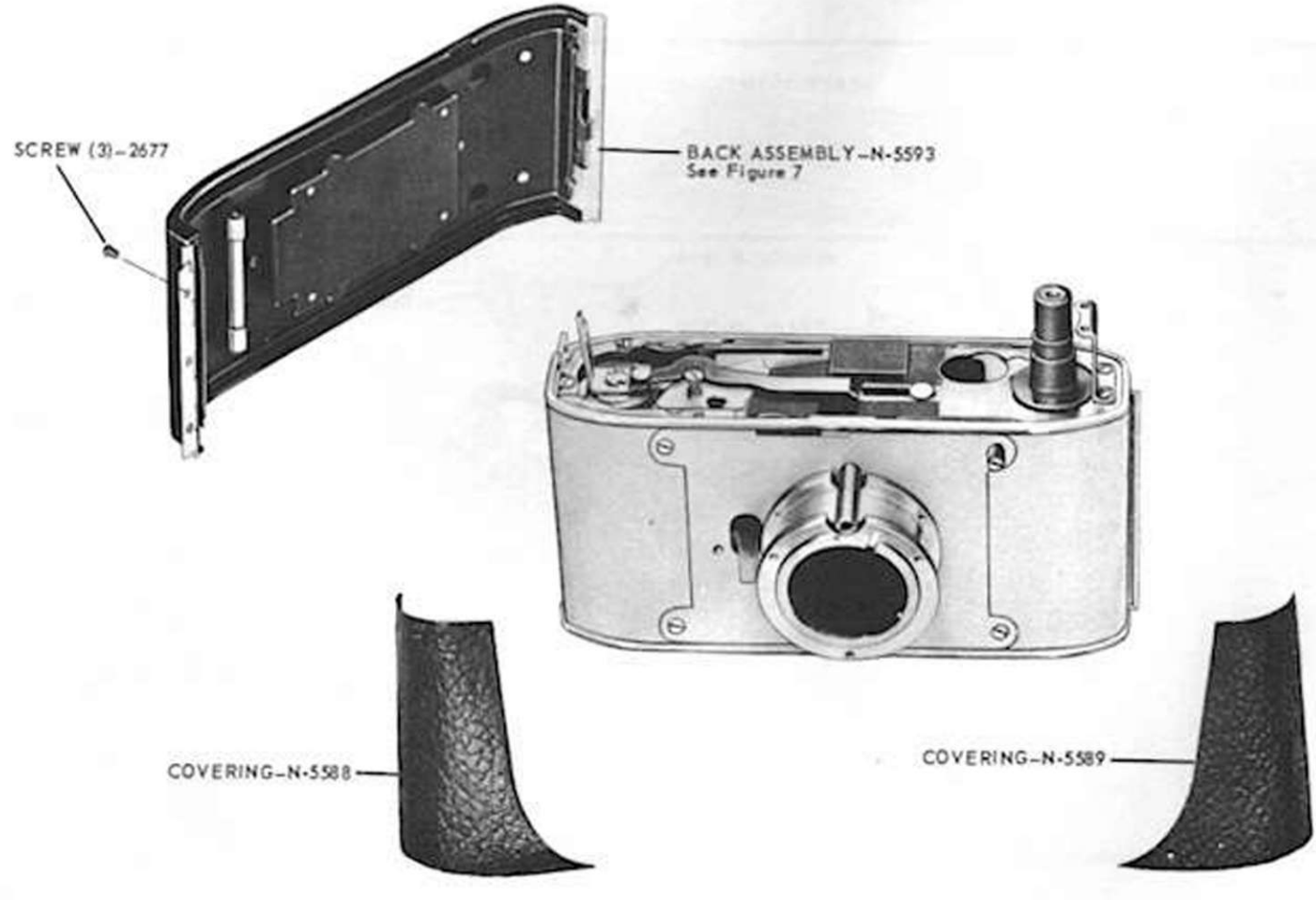
SCREW (3)–2677
BACK ASSEMBLY–N-5593
See Figure 7
COVERING–N-5588
COVERING–N-5589

6

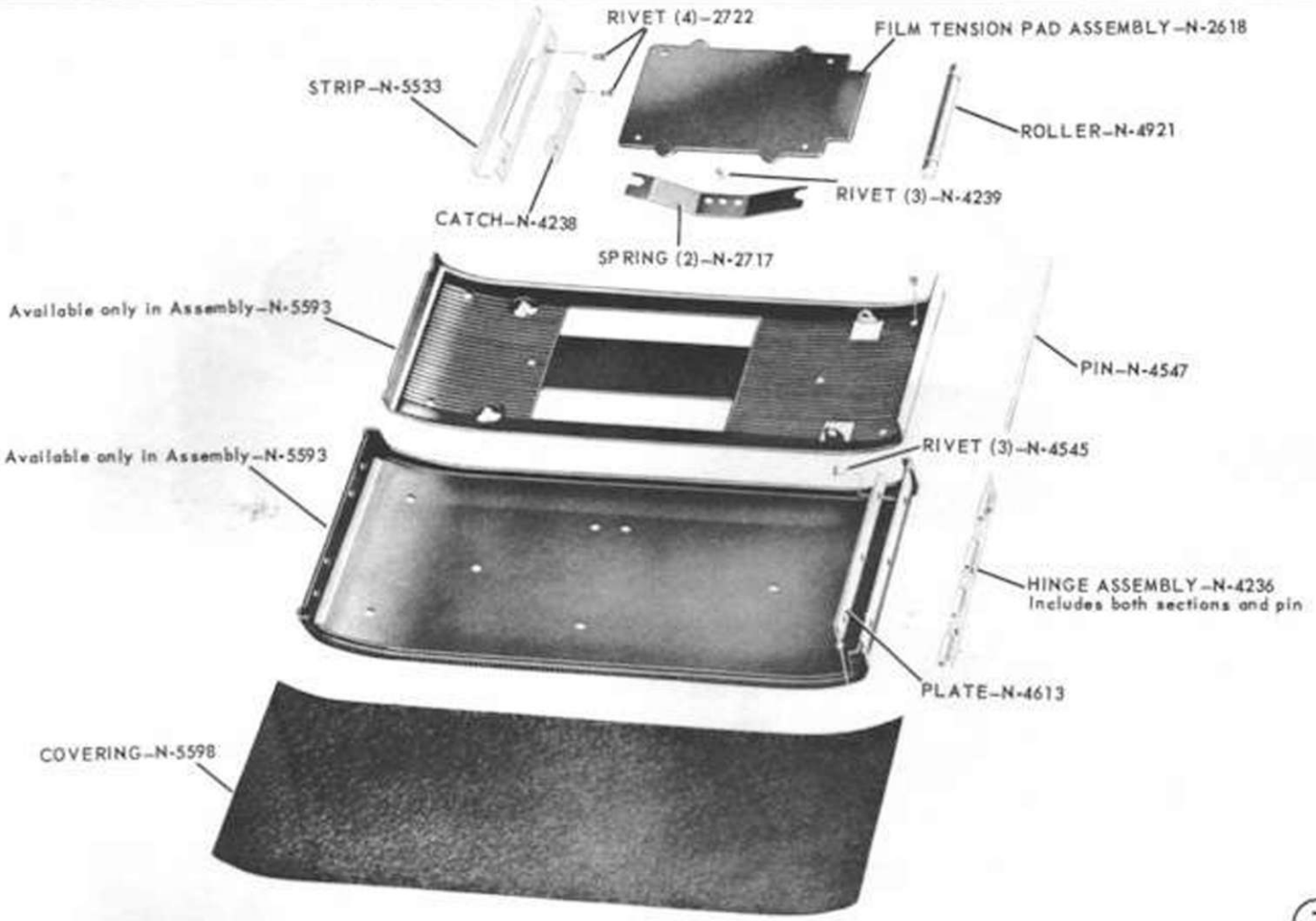

BACK ASSEMBLY–N-5593

7

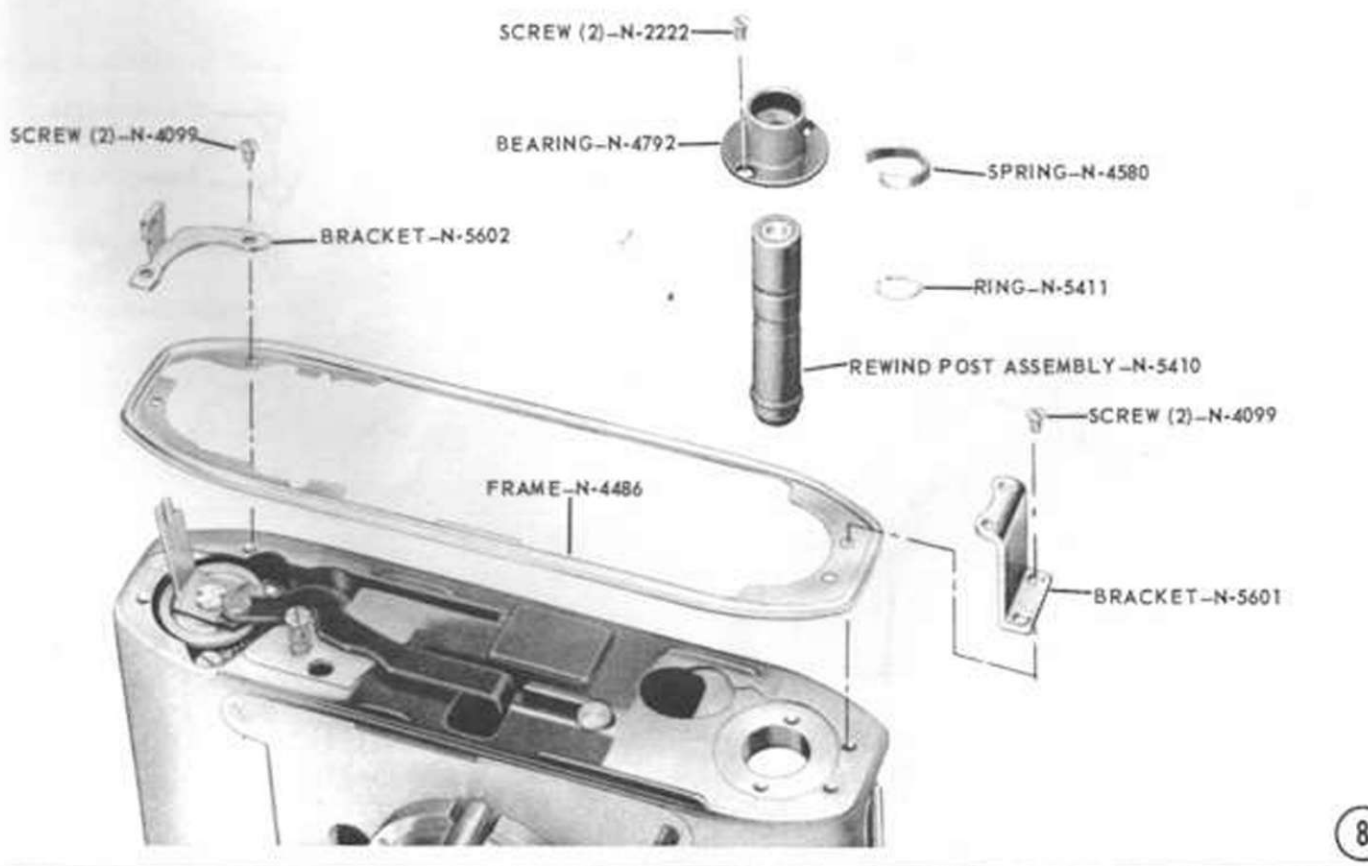

8

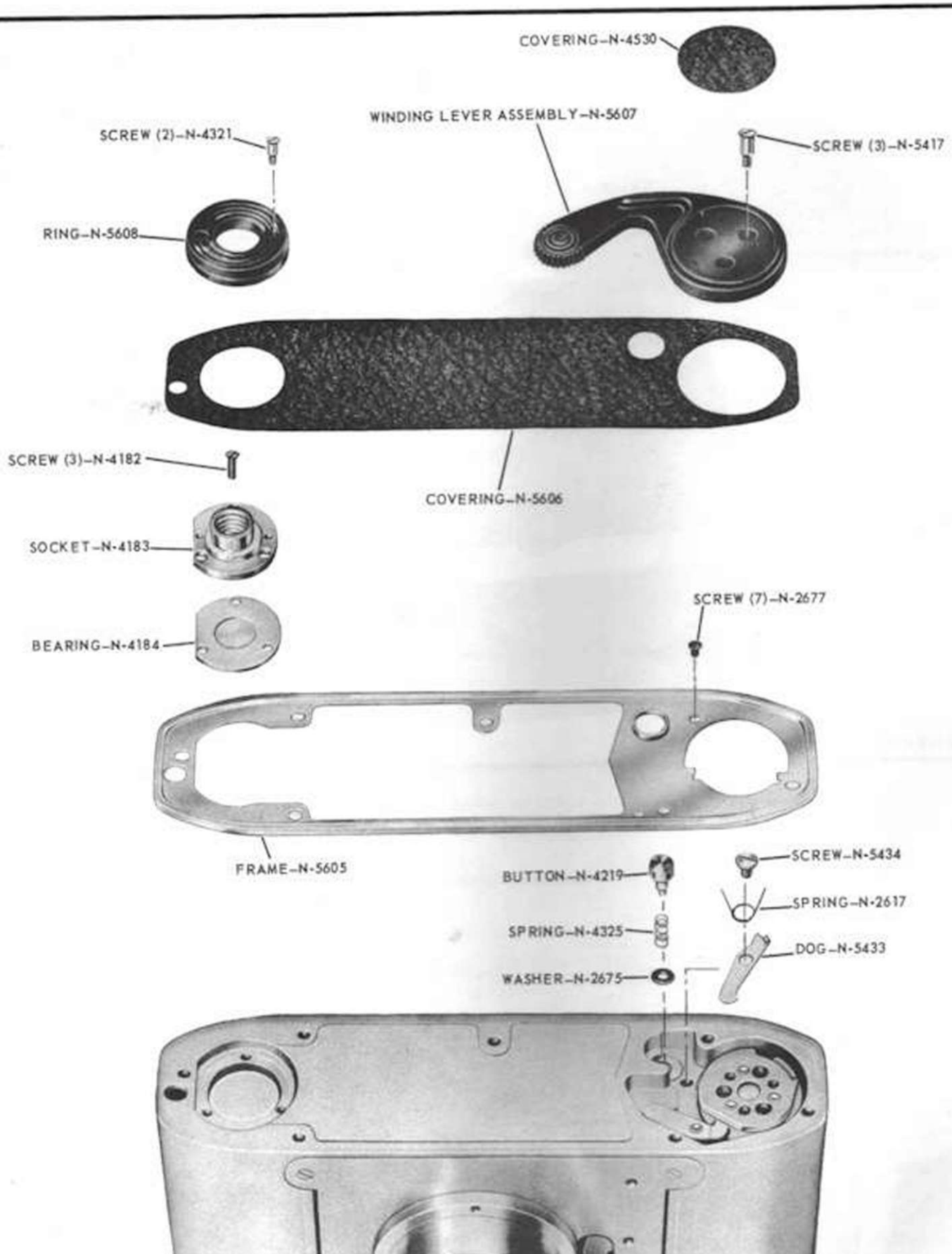
COVERING–N-4530
WINDING LEVER ASSEMBLY–N-5607
SCREW (2)–N-4321
SCREW (3)–N-5417
RING–N-5608
SCREW (3)–N-4182
COVERING–N-5606
SOCKET–N-4183
SCREW (7)–N-2677
BEARING–N-4184
FRAME–N-5605
BUTTON–N-4219
SCREW–N-5434
SPRING–N-2617
SPRING–N-4325
DOG–N-5433
WASHER–N-2675

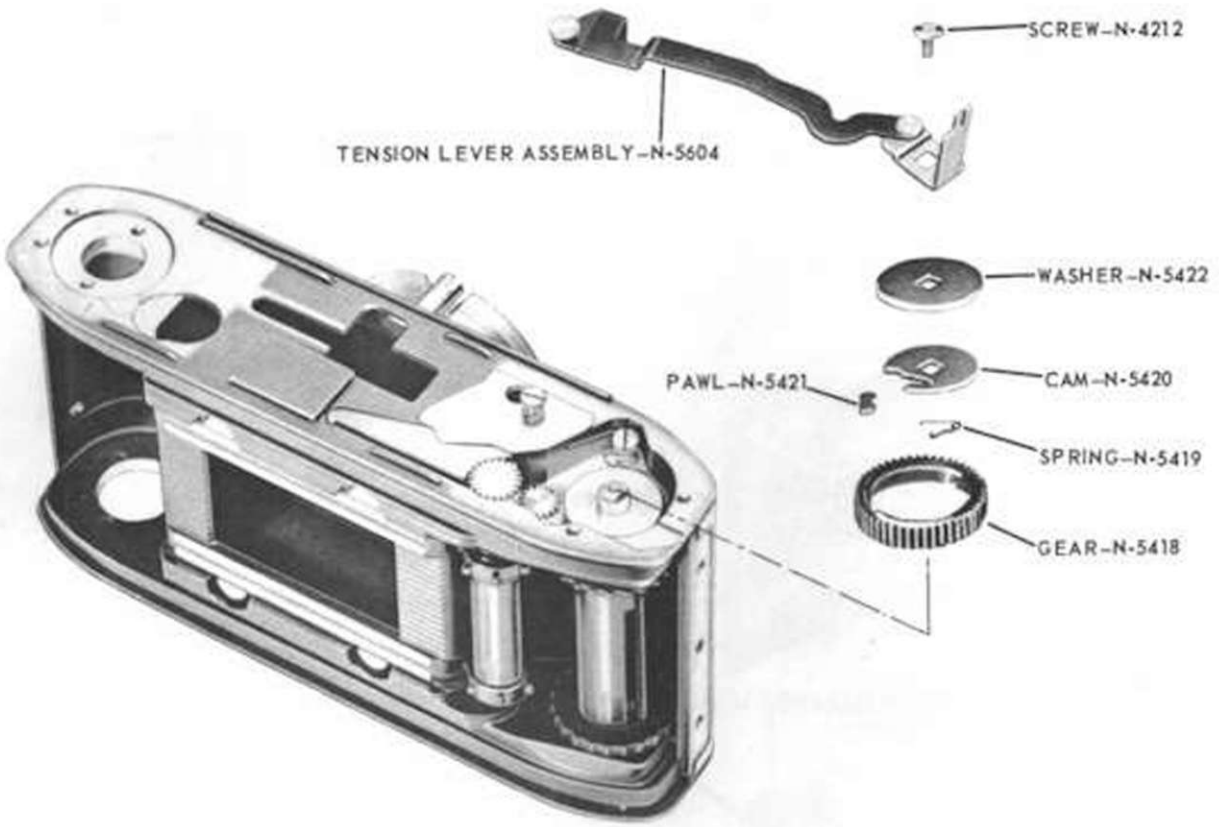
SCREW–N-4212
TENSION LEVER ASSEMBLY–N-5604
WASHER–N-5422
PAWL–N-5421
CAM–N-5420
SPRING–N-5419
GEAR–N-5418

10

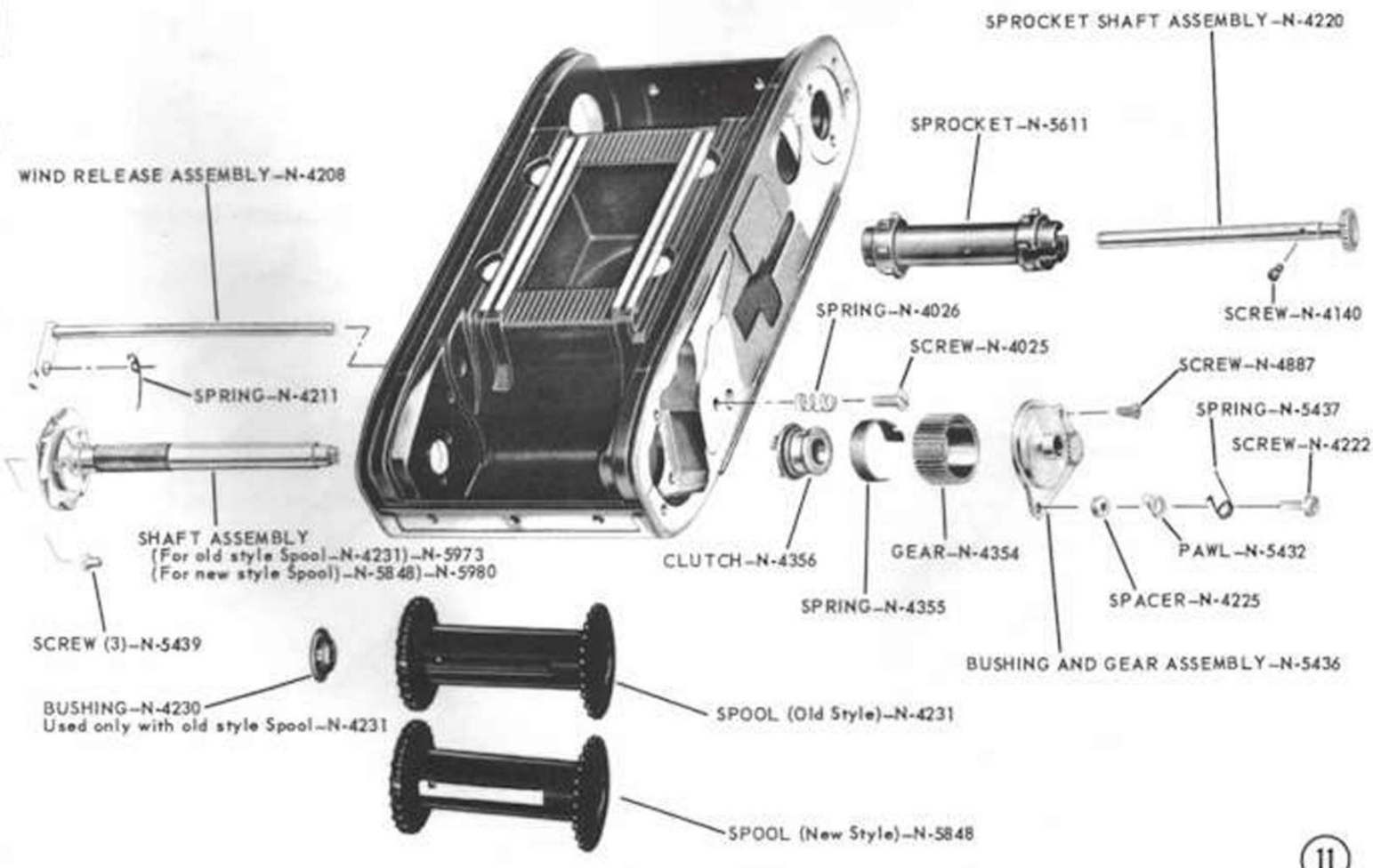
SPROCKET SHAFT ASSEMBLY–N-4220
SPROCKET–N-5611
WIND RELEASE ASSEMBLY–N-4208
SPRING–N-4026
SCREW–N-4140
SCREW–N-4025
SCREW–N-4887
SPRING–N-4211
SPRING–N-5437
SCREW–N-4222
SHAFT ASSEMBLY
(For old style Spool–N-4231)–N-5973
(For new style Spool)–N-5848)–N-5980
CLUTCH–N-4356
GEAR–N-4354
PAWL–N-5432
SPRING–N-4355
SPACER–N-4225
SCREW (3)–N-5439
BUSHING AND GEAR ASSEMBLY–N-5436
BUSHING–N-4230
Used only with old style Spool–N-4231
SPOOL (Old Style)–N-4231
SPOOL (New Style)–N-5848

11

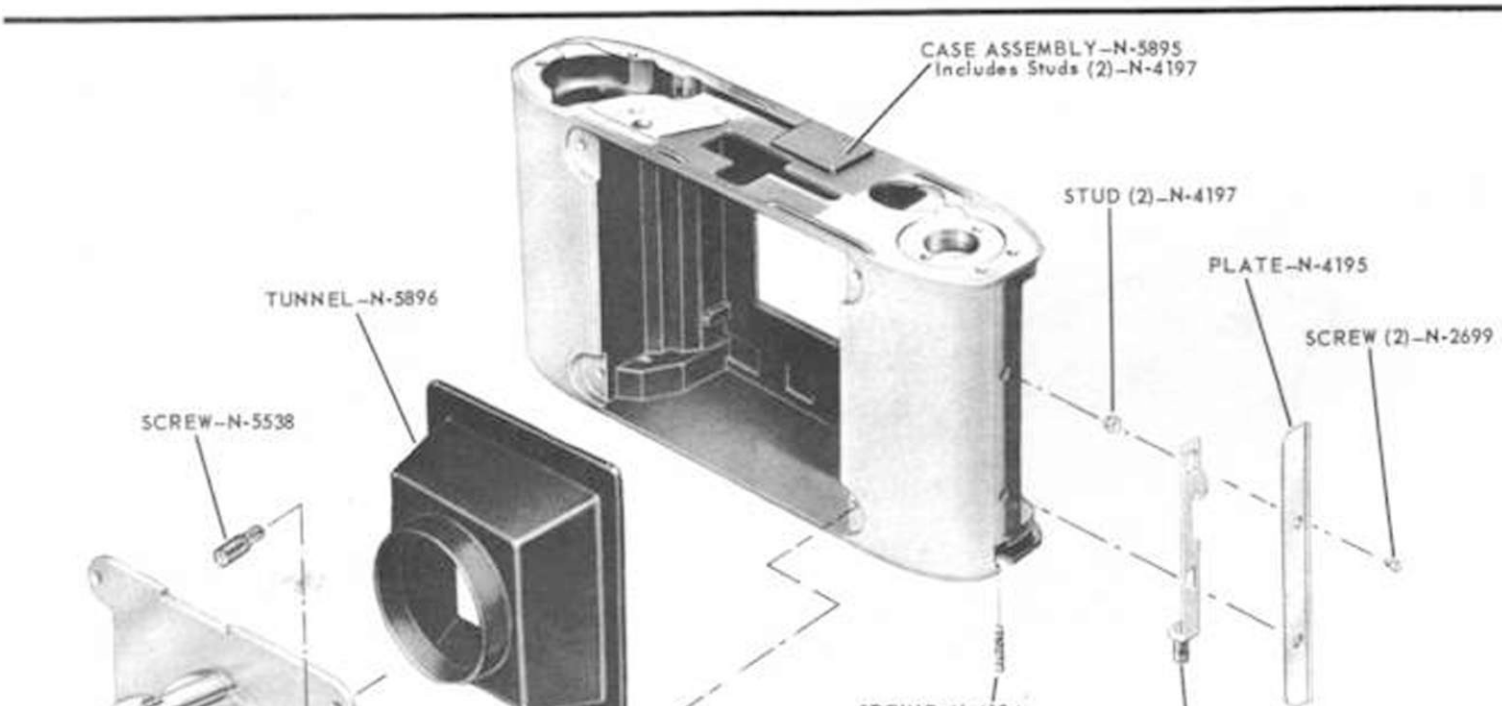

12

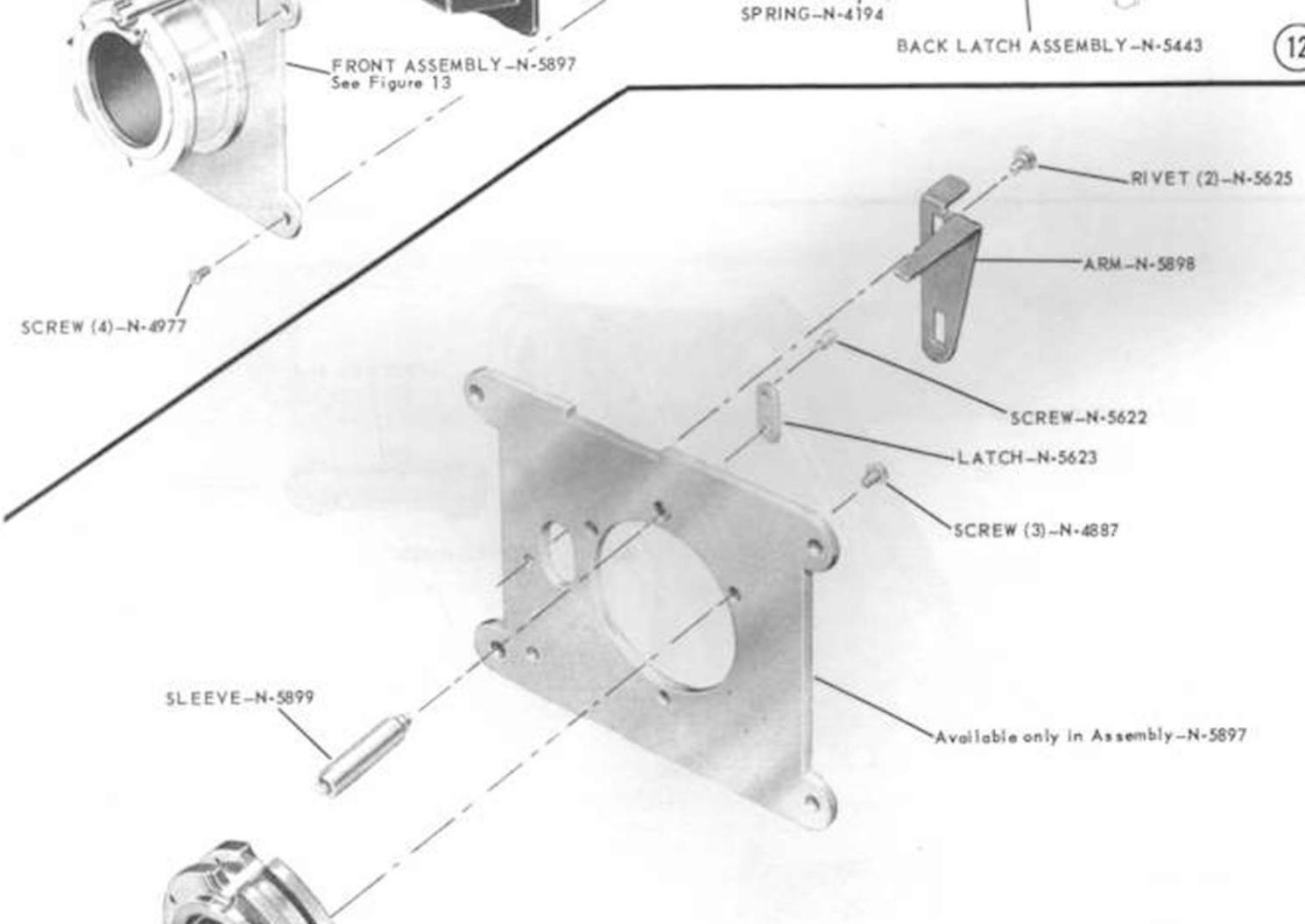

13

FRONT ASSEMBLY–N-5897

SHUTTER ASSEMBLY (Feet)–N-5894
See Figures 15 thru 25

14

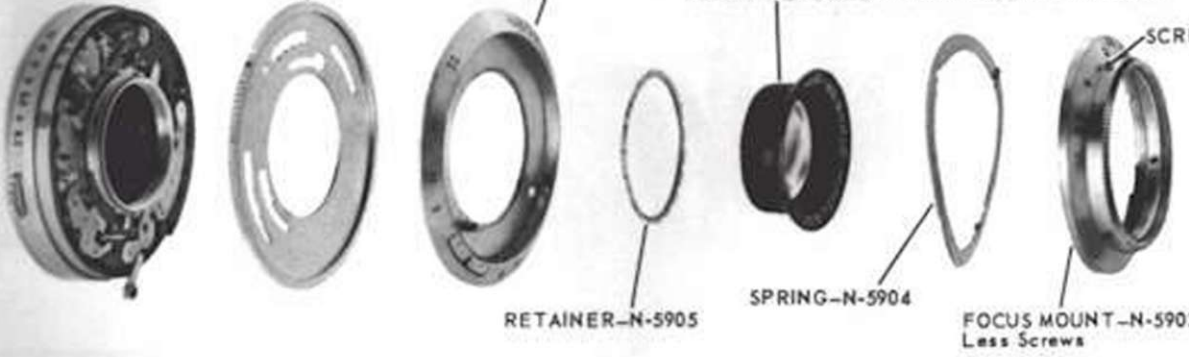

15

16

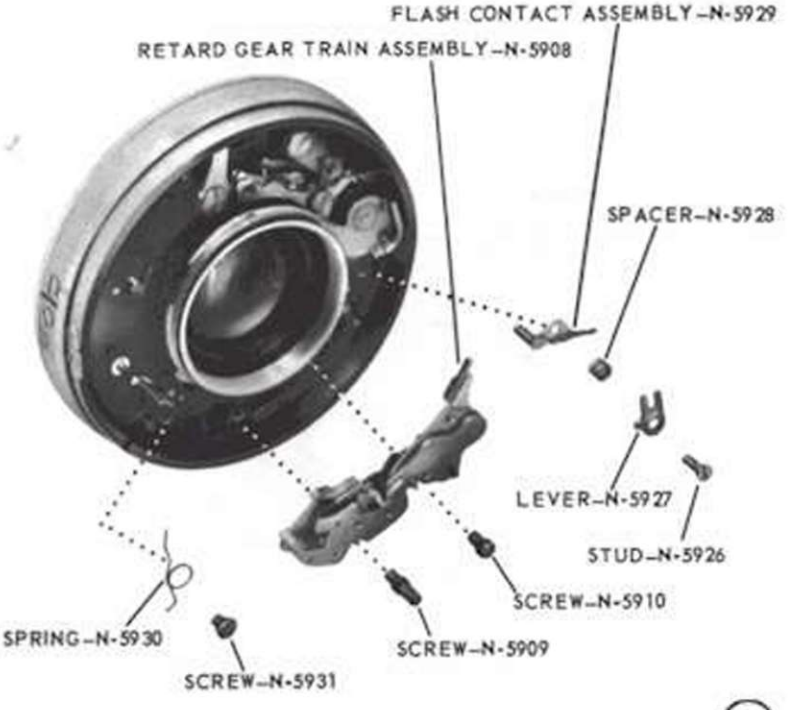

17